# Introduction

Modulating the frequency of a high frequency carrier signal with respect to a low frequency message signal is called Frequency Modulation (FM). Objective of the following laboratory exercises is to generate and analyze various types of FM. This laboratory measures the properties of FM signals as a function of the modulation index, both Narrow Band FM (NBFM) and Wide Band FM (WBFM) signals are studied.

For $A_m \cos 2\pi f_m t$ input, FM can be represented in terms of Bessel function as:

$$FM(t) = A * \left[ \sum_{n=-\infty}^{n=\infty} J_n(\beta) * cos\ 2\pi(f_c + n * f_m)t \right]$$

A Voltage Controlled Oscillator (VCO) is used in this laboratory as the FM modulator. Center frequency of sinusoidal signal may deviate from mean frequency of sinusoidal signal, i.e., frequency deviation of the VCO. By controlling the external voltage, VCO can be designed to operate with desired frequency deviation which is given as:

$$\Delta f = K_f * A_m\ [Hz]$$

where $K_f$ is the frequency sensitivity of VCO and $A_m$ is the amplitude of the message signal.

# A.5 - Frequency Modulation

### A.5.1. Experimental Setup for Frequency Sensitivity of VCO

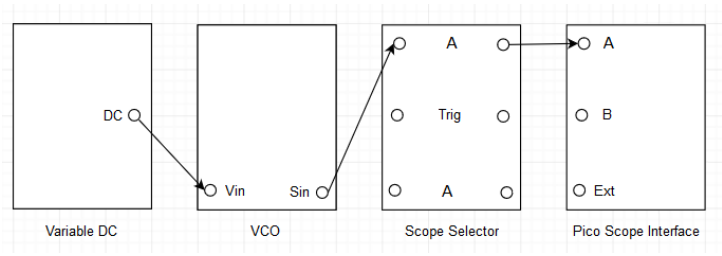


**Figure A.5.1: Setup for frequency sensitivity of VCO.**

### A.5.2. Laboratory Exercise for Frequency Sensitivity of VCO

- **i.** Set the variable DC to generate -1 V signal.
- **ii.** Take a screenshot of output of the variable DC under the scope mode.
- **iii.** Toggle the on-board switch-SW2 of the VCO to VCO and toggle the front panel switch of the VCO to LO. Turn both the knobs of the VCO to minimum.
- **iv.** Adjust the frequency knob of the VCO to generate 10 kHz sine signal.
- **v.** Make the setup as shown in Figure A.5.1.
- **vi.** Observe that the gain knob of the VCO is at minimum, i.e., input voltage to the VCO is 0 V. Take a screenshot of output of the VCO under the spectrum mode.
- **vii.** Adjust the gain knob of the VCO to generate 11 kHz sine signal.

viii. Observe that the input voltage to the VCO is no more 0 V. Take a screenshot of output of the VCO under the spectrum mode.

ix. Calculate the frequency sensitivity of the VCO for the current setup.

### A.5.3. Experimental Setup for NBFM and WBFM

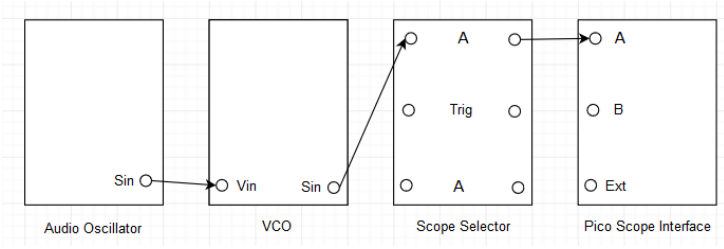


**Figure A.5.2: NBFM and WBFM modulator setup.**

### A.5.4. Laboratory Exercise for NBFM and WBFM

i. Calculate the theoretical frequency deviation of the VCO, for modulation index of 0.3, message frequency of 5 kHz and message amplitude of 4 V peak to peak.

ii. Set an audio oscillator to generate 5 kHz sine signal.

iii. Set the variable DC to generate -2 V signal.

iv. Toggle the on-board switch-SW2 of the VCO to VCO and toggle the front panel switch of the VCO to HI. Turn both the knobs of the VCO to minimum.

v. Adjust the frequency knob of the VCO to generate 100 kHz sine signal.

vi. According to section A.5.2, set the VCO to operate for theoretical frequency deviation.

vii. Unplug the signal from DC of the variable DC to input of the VCO. Plug the signal from output of the audio oscillator to input of the VCO.

viii. Observe the NBFM spectrum, how many numbers of sideband pairs are visible above -40 dB$\mu$?

ix. Take a screenshot of output of the VCO under the spectrum mode.

x. Increase the gain knob of the VCO to observe the NBFM spectrum change into the WBFM spectrum. What causes the increase in number of sideband pairs?

xi. Adjust the gain knob of the VCO to obtain modulation index of 1.45, i.e., power of the carrier and power of either or both of the sidebands of first pair are equal. How many numbers of sideband pairs are visible above -40 dB$\mu$?

xii. Take a screenshot of output of the VCO under the spectrum mode.

xiii. Calculate the theoretical frequency deviation of the VCO for the current setup.

xiv. Unplug the signal from output of the audio oscillator to input of the VCO. Plug the signal from DC of the variable DC to input of the VCO. Measure the observed frequency deviation of the VCO.

**xv.** Unplug the signal from DC of the variable DC to input of the VCO. Plug the signal from output of the audio oscillator to input of the VCO.

**xvi.** Adjust the gain knob of the VCO to obtain modulation index of 2.45, i.e., power of the carrier drops to minimum or first Bessel zero. How many numbers of sideband pairs are visible above -40 dB$\mu$? Repeat step **xii** through step **xv**, accordingly.

**xvii.** Adjust the gain knob of the VCO to observe power of the second pair of sidebands drop to minimum or third Bessel zero. How many numbers of sideband pairs are visible above -40 dB$\mu$?

**xviii.** Take a screenshot of output of the VCO under the spectrum mode.

**xix.** Unplug the signal from output of the audio oscillator to input of the VCO. Plug the signal from DC of the variable DC to input of the VCO. Measure the observed frequency deviation of the VCO and calculate the modulation index for the current setup.

### A.5.5. Experimental Setup for PLL

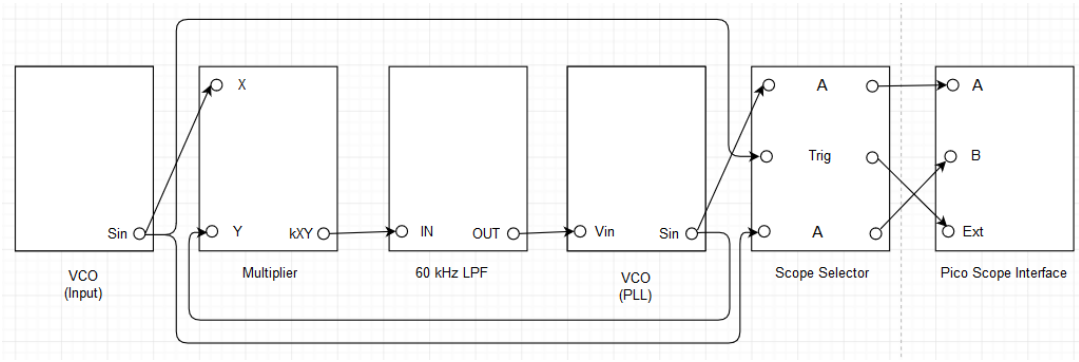


**Figure A.5.3: Setup for PLL.**

NOTE: Above given experimental setup consists of two VCOs, i.e., input VCO and PLL VCO.

### A.5.6. Laboratory Exercise for PLL

**i.** Toggle the on-board switch-SW2 of the input VCO to VCO and toggle the front panel switch of the input VCO to HI. Turn both the knobs of the input VCO to minimum.

**ii.** Adjust the frequency knob of the input VCO to generate 100 kHz sine signal.

**iii.** Toggle the on-board switch-SW2 of the PLL VCO to VCO and toggle the front panel switch of the PLL VCO to HI. Turn both the knobs of the PLL VCO to minimum.

iv. Adjust the frequency knob of the PLL VCO to generate 101 kHz sine signal.

v. Make the PLL setup as shown in Figure A.5.3.

vi. Toggle the front panel switch of the multiplier to DC. Turn the knob of the 60 kHz LPF to minimum.

vii. Observe that the frequency and phase of the input VCO sine signal are not equal to the frequency and phase of the PLL VCO sine signal.

viii. Take a screenshot of output of the PLL VCO and output of the input VCO under the scope mode.

ix. Adjust the knob of the 60 kHz LPF and the gain knob of the PLL VCO to lock both the sine signals.

x. Take a screenshot of output of the PLL VCO and output of the input VCO under the scope mode.

## A.5.7. Experimental Setup for NBFM and WBFM Demodulation

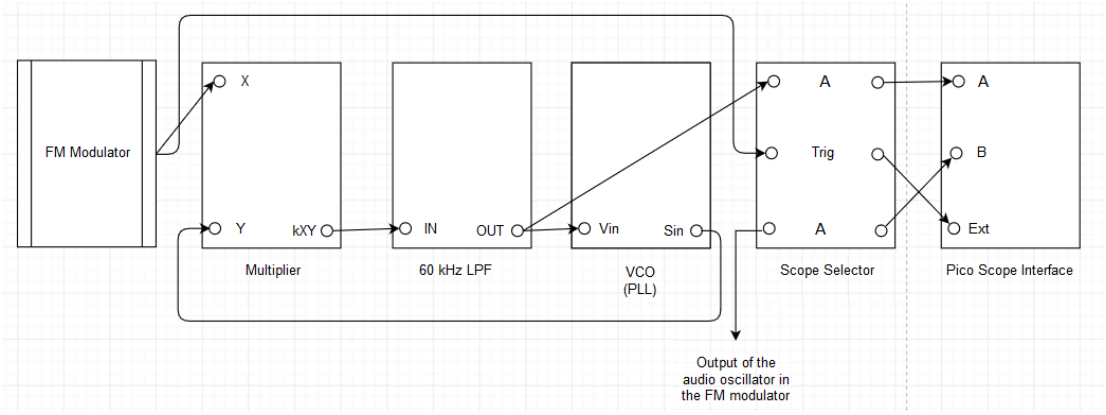


**Figure A.5.4: NBFM and WBFM demodulator setup.**

## A.5.8. Laboratory Exercise for NBFM and WBFM Demodulation

i. Retain the modulator setup with modulation index of 0.3 and make the demodulator setup as show in Figure A.5.4.

ii. Toggle the front panel switch of the multiplier to DC, toggle the on-board switch-SW2 of the PLL VCO to VCO and toggle the front panel switch of the PLL VCO to HI. Turn both the knobs of the PLL VCO to minimum and turn the knob of the 60 kHz LPF to minimum.

iii. Adjust both the knobs of the PLL VCO and the knob of the 60 kHz LPF to obtain the demodulated message signal with minimum phase shift.

iv. Take a screenshot of output of the 60 kHz LPF and output of the audio oscillator under the scope mode.

v. Repeat step **iii** and step i**v**, for modulation index of 1.45, 2.45 and $\approx$ 5, accordingly.